Monaco

Multi fuel stove

BS EN 13240

Model : 134 06 05

Nominal output :
5,9 kW (wood)
8,8 kW (solid mineral fuels)

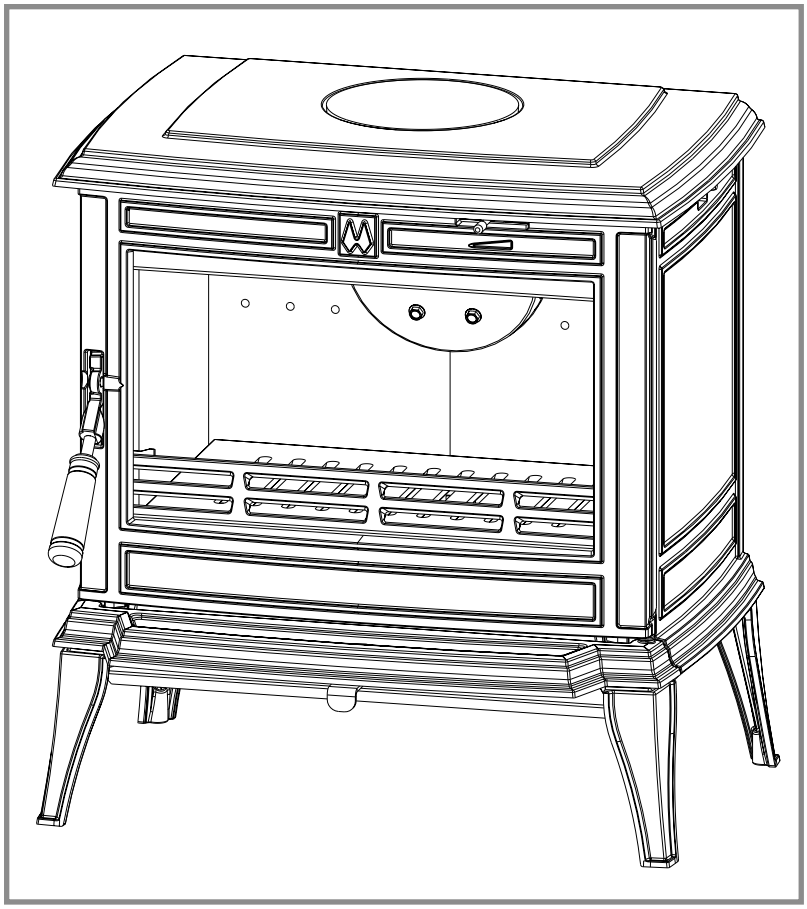

Description of the appliance

Installation instructions

Operating instructions

Spare parts

Warranty certificate

Document n°1303-2
25/10/2012

Technical manual

to be saved

by the user

for future reference

BOUTIQUES DU FEU
Franco Belge

Parc d'activités de la Verte Rue
Allée des Prêles
59270 BAILLEUL
Tél. : 03 28 40 32 50

Subject to modifications

USER MANUAL FOR STOVES WITHOUT BOILERS

SUPPLEMENTARY INSTALLATION INSTRUCTIONS FOR THE UK MARKET TO BE READ IN CONJUNCTION WITH THOSE IN THE INSTRUCTION BOOKLET

READ THE INSTRUCTION BOOKLET AND THESE SUPPLEMENTARY INSTRUCTIONS CAREFULLY BEFORE INSTALLATION

These instructions together with those in the instruction booklet cover the basic principles to ensure the satisfactory installation of the stove, although detail may need slight modification to suit particular local site conditions.
In all cases the installation must comply with current Building Regulations, Local Authority Byelaws and other specifications or regulations as they affect the installation of the stove.
It should be noted that the Building Regulations requirements may be met by adopting the relevant recommendations given in British Standards BS 8303, BS EN 15287-1:2007 as an alternative means to achieve an equivalent level of performance to that obtained following the guidance given in Approved Document J.
Should any conflict apply between these instructions and the original manufacturers instructions then the most stringent advice must apply.

Please note that it is a legal requirement under England and Wales Building Regulations that the installation of the stove is either carried out under Local Authority Building Control approval or is installed by a Competent Person registered with a Government approved Competent Persons Scheme. HETAS Ltd operate such a Scheme and a listing of their Registered Competent Persons can be found on their website at www.hetas.co.uk.

CO Alarms:-

Building regulations require that when ever a new or replacement fixed solid fuel or wood/biomass appliance is installed in a dwelling a carbon monoxide alarm must be fitted in the same room as the appliance. Further guidance on the installation of the carbon monoxide alarm is available in BS EN 50292:2002 and from the alarm manufacturer's instructions. Provision of an alarm must not be considered a substitute for either installing the appliance correctly or ensuring regular servicing and maintenance of the appliance and chimney system.

HEALTH AND SAFETY PRECAUTIONS

Special care must be taken when installing the stove such that the requirements of the Health and Safety at Work Act are met.

Handling
Adequate facilities must be available for loading, unloading and site handling.

Fire Cement
Some types of fire cement are caustic and should not be allowed to come into contact with the skin. In case of contact wash immediately with plenty of water.

Asbestos
This stove contains no asbestos. If there is a possibility of disturbing any asbestos in the course of installation then please seek specialist guidance and use appropriate protective equipment.

Metal Parts
When installing or servicing this stove care should be taken to avoid the possibility of personal injury.

STOVE PERFORMANCE

Refer to the manufacturer's main instruction manual for details of the stove's performance.

PREPARATORY WORK AND SAFETY CHECKS

IMPORTANT WARNING

This stove must not be installed into a chimney that serves any other heating appliance.

There must not be an extractor fan fitted in the same room as the stove as this can cause the stove to emit fumes into the room.

Chimney

In order for the stove to perform satisfactorily the chimney height must be sufficient to ensure an adequate draught of approximately 15 Pa so as to clear the products of combustion and prevent smoke problems into the room.

NOTE: A chimney height of not less than 4.5 metres measured vertically from the outlet of the stove to the top of the chimney should be satisfactory. Alternatively the calculation procedure given in EN 13384-1 may be used as the basis for deciding whether a particular chimney design will provide sufficient draught. BS EN 15287-1:2007 gives additional details.

The outlet from the chimney should be above the roof of the building in accordance with the provisions of Building Regulations Approved Document J.

If installation is into an existing chimney then it must be sound and have no cracks or other faults which might allow fumes into the house. Older properties, especially, may have chimney faults or the cross section may be too large i.e. more than 230 mm x 230 mm. Remedial action should be taken, if required, seeking expert advice, if necessary. If it is found necessary to line the chimney then a flue liner suitable for solid fuel must be used in accordance with Building Regulations Approved Document J.

Any existing chimney must be clear of obstruction and have been swept clean immediately before installation of the stove. If the stove is fitted in place of an open fire then the chimney should be swept one month after installation to clear any soot falls which may have occurred due to the difference in combustion between the stove and the open fire.

If there is no existing chimney then any new system must be to the designation described above and in accordance with Building Regulations Approved Document J.

A single wall metal fluepipe is suitable for connecting the stove to the chimney but is not suitable for use as the complete chimney. The chimney and connecting fluepipe must have a minimum diameter of 150 mm and its dimension should be not less than the size of the outlet socket of the stove.

Any bend in the chimney or connecting fluepipe should not exceed 45°. 90° bends should not be used.

Combustible material should not be located where the heat dissipating through the walls of fireplaces or flues could ignite it. Therefore when installing the stove in the presence of combustible materials due account must be taken of the guidance on the separation of combustible material given in Building Regulations Approved Document J and also in these stove instructions.

If it is found that there is excessive draught in the chimney then a draught stabiliser should be fitted. Fitting of a draught stabiliser will affect the requirement for the permanent air supply into the room in which the stove is fitted in accordance with Approved Document J (see also combustion air supply).

Adequate provision e.g. easily accessible soot door or doors must be provided for sweeping the chimney and connecting fluepipe where it is not intended for the chimney to be swept through the appliance.

Hearth

The hearth should be level and able to accommodate the weight of the stove and its chimney if the chimney is not independently supported. The weight of the stove is indicated in the brochure.

The stove should preferably be installed on a non-combustible hearth of a size and construction that is in accordance with the provisions of the current Building Regulations Approved Document J.

The clearance distances to combustible material beneath, surrounding or upon the hearth and walls adjacent to the hearth should comply with the guidance on the separation of combustible material given in Building Regulations Approved Document J and also in these stove instructions.

If the stove is to be installed on a combustible floor surface, it must be covered with a non-combustible material at least 12mm thick, in accordance with Building Regulations Approved Document J, to a distance of 30 cm in front of the stove and 15 cm to each side measuring from the door of the combustion chamber.

Combustion air supply

In order for the stove to perform efficiently and safely there must be an adequate air supply into the room in which the stove is installed to provide combustion air. The provision of air supply to the stove must be in accordance with current Building Regulations Approved Document J. Special attention should be taken in newer build properties where the design air permeability is less than $5m^3/h.m^2$. Approved Document J gives more information on this. An opening window is not appropriate for this purpose.

The fitting of an external air kit direct to outside air must not be considered substitute for installing the appliance with a permanently open air vent in compliance with ventilation requirements stated in Approved Document J. Please reference ADJ for further guidance.

Connection to chimney

Stoves may have a choice of either a rear or top flue gas connector that allows connection to either a masonry chimney or a prefabricated factory made insulated metal chimney in accordance with their instructions. In some cases it may be necessary to fit an adaptor to increase the diameter of the flue to the minimum required 150 mm section of the chimney or liner. All joints in the connection between the stove and the chimney must be made gastight using fire cement and where necessary fire-proof rope infill. Means should be made for sweeping the entire length of the flue, be that through the appliance or by suitable sweeping hatch in the flue.

Commissioning and handover

Ensure all parts are fitted in accordance with the instructions.

On completion of the installation allow a suitable period of time for any fire cement and mortar to dry out, before lighting the stove. Once the stove is under fire check all seals for soundness and check that the flue is functioning correctly and that all products of combustion are vented safely to atmosphere via the chimney terminal.
On completion of the installation and commissioning ensure that the operating instructions for the stove are left with the customer. Ensure to advise the customer on the correct use of the appliance and warn them to use only the recommended fuel for the stove.
Advise the user what to do should smoke or fumes be emitted from the stove. The customer should be warned to use a fireguard to BS 8423:2002 (Replaces BS 6539) in the presence of children, aged and/or infirm persons.

HETAS Ltd Approval;

These appliances have been approved by HETAS Ltd as an intermittent operating appliance for burning wood logs only.

USER MANUAL FOR STOVES WITHOUT BOILERS

SUPPLEMENTARY OPERATING INSTRUCTIONS FOR THE UK MARKET TO BE READ IN CONJUNCTION WITH THOSE IN THE INSTRUCTION BOOKLET

READ THE INSTRUCTION BOOK AND THESE INSTRUCTIONS CAREFULLY BEFORE USING THE STOVE

WARNING NOTE

Properly installed, operated and maintained this stove will not emit fumes into the dwelling. Occasional fumes from de-ashing and re-fuelling may occur. However, persistent fume emission is potentially dangerous and must not be tolerated. If fume emission does persist, then the following immediate action should be taken: -

(a) Open doors and windows to ventilate the room and then leave the premises.

(b) Let the fire go out.

(c) Check for flue or chimney blockage and clean if required

(d) Do not attempt to relight the fire until the cause of the fume emission has been identified and corrected. If necessary seek expert advice.

The most common cause of fume emission is flueway or chimney blockage. For your own safety these must be kept clean at all times.

IMPORTANT NOTES

General
Before lighting the stove check with the installer that the installation work and commissioning checks described above have been carried out correctly and that the chimney has been swept clean, is sound and free from any obstructions. As part of the stoves' commissioning and handover the installer should have shown you how to operate the stove correctly.

CO Alarm
Your installer should have fitted a CO alarm in the same room as the appliance. If the alarm sounds unexpectedly, follow the instructions given under "Warning Note" above.

Air Controls
Manually operated air control can be managed by adjusting the air control valve to increase/decrease the air flow to the stove.

Use of fireguard
When using the stove in situations where children, aged and/or infirm persons are present a fireguard must be used to prevent accidental contact with the stove. The fireguard should be manufactured in accordance with BS 8423:2002.

Chimney cleaning
The chimney should be swept at least twice a year. It is important that the flue connection and chimney are swept prior to lighting up after a prolonged shutdown period.
If the stove is fitted in place of an open fire then the chimney will require sweeping after a month of continuous operation. This is a precaution to ensure that any "softer" deposits left from the open fire usage have not been loosened by the higher flue temperatures generated by the closed stove.

In situations where it is not possible to sweep through the stove the installer will have provided alternative means, such as a soot door. After sweeping the chimney the stove flue outlet and the flue pipe connecting the stove to the chimney must be cleaned with a flue brush.

Periods of Prolonged Non-Use

If the stove is to be left unused for a prolonged period of time then it should be given a thorough clean to remove ash and unburned fuel residues. To enable a good flow of air through the appliance to reduce condensation and subsequent damage, leave the air controls fully open.

Extractor fan

There must not be an extractor fan fitted in the same room as the stove as this can cause the stove to emit smoke and fumes into the room.

Aerosol sprays

Do not use an aerosol spray on or near the stove when it is alight.

Use of operating tools

Always use the operating tools provided when handling parts likely to be hot when the stove is in use.

Chimney Fires

If the chimney is thoroughly and regularly swept, chimney fires should not occur. However, if a chimney fire does occur turn off the stove immediately and isolate the mains electricity supply (if applicable), and tightly close the doors of the stove. This should cause the chimney fire to go out. If the chimney fire does not go out when the above action is taken then the fire brigade should be called immediately. Do not relight the stove until the chimney and flueway have been cleaned and examined by a professional.

Permanent air vent

The stove requires a permanent and adequate air supply in order for it to operate safely and efficiently. In accordance with current Building Regulations the installer may have fitted a permanent air supply vent into the room in which the stove is installed to provide combustion air. This air vent should not under any circumstances be shut off or sealed.

USER OPERATING INSTRUCTIONS

Please read the important notices given above before referring to the main instruction book for detailed operating instructions.

Recommended fuels*:*

Please note that HETAS Ltd Appliance Approval only covers the use of wood logs on this appliance. HETAS Ltd Approval does not cover the use of other fuels either alone or mixed with the recommended fuels listed above, nor does it cover instructions for the use of other fuels. The stoves have a refuelling interval of 0.75h to achieve the nominal rated output. Wood logs should be seasoned with a moisture content of around 20%.

De-Ashing*:*

It is important that you empty the ash pan at regular intervals and dispose of ash in a safe and environmentally friendly manner. Always use the operating tools provided and replace the ashpit cover correctly. **DO NOT allow ash to build up underneath the bed as this may cause damage to the grate.**

Spare Parts*:*

For more information on obtaining spare parts, please contact the manufacturer directly using the contact in the main stove brochure.

FRANCO BELGE congratulates you on your choice.

FRANCO BELGE, guarantees the quality of its appliances and is committed to meet its customers' needs.

FRANCO BELGE, which can boast a 80-year experience in the industry of heating devices, uses state-of-the-art technologies

to design and manufacture its whole range of products.

This document contains instructions on how to install your appliance and make full use of its functions, both for your comfort and safety.

CONTENTS

Product information ..... **p. 3**

Package ..... p. 3
General characteristics ..... p. 3
Appliance description ..... p. 3
Operating principle ..... p. 3

Installation instructions ..... **p. 4**

Warning to the user ..... p. 4
Location of the unit ..... p. 4
Mounting the flue collar ..... p. 5
Smoke exit on the top ..... p. 5
Smoke exit at rear ..... p. 5
Flue ..... p. 5
Chimney connector ..... p. 6
Door closing pressure ..... p. 6
Pre-utilisation check ..... p. 7
Maintenance of the chimney ..... p. 7

Instructions for user ..... **p. 8**

Fuel ..... p. 9
Instruction for use with wood ..... p. 9
Refuelling procedure ..... p. 9
Operating procedure
when using solid mineral fuels ..... p. 9
De-ashing ..... p. 9
Maintenance of the chimney ..... p. 10
Maintenance of the stove ..... p. 10
Safety advice ..... p. 10
Trouble shooting ..... p. 11

Spare parts ..... **p. 12**

This appliance is meant to burn wood safely
WARNING
Incorrectly installed, this appliance can be dangerous and possibly cause serious accidents.
We recommend that you engage the services of a professional engineer for its installation and the regular maintenance requirements

1. Product information

1.1. Package

- 1 package : stove.

1.2. General characteristics

Reference		**134 06 05**
Nominal heat output	kW	5,9
Chimney draft required	Pa	12
Hearth dimensions		
- width	mm	429
- depth	mm	240
- height	mm	225
Log dimensions		
- lenght maxi	cm	40
Ash pan capacity	litres	2,2
Net weight	kg	90
Heated Volume	m3	180
PERFORMANCE WITH WOOD		
Efficiency (net)	%	75,7
Co (13% O2)	%	0,28
- Mean flue gas temperature	°C	317
- Flue gas mass flow	g/s	4,9

PERFORMANCE WITH MINERAL SOLID FUELS (smokeless fuels)*		
Nominal heat output	kW	8,8
Efficiency (net)	%	70,6
Co (13% O2)	%	0,15
- Mean flue gas temperature	°C	374
- Flue gas mass flow	g/s	5,8

** Authorised fuels under section 20 of the clean air act.*

1.3 Appliance description

Multifuel stove - in conformity with BS EN 13240.
- Intermittent-burning heating appliance.
- Detachable flue spigot for rear or top chimney connection.
- Front loading door fitted with large refractory glass panel.
- Adjustable primary air for controlling the burning rate.
- Large ash-pan.

1.4 Operating principle

The " MONACO " is designed for operation with the door closed. Heat is mainly diffused by radiation, through the window and body of the appliance.
Combustion occurs on the grate, with draught entry through the top of the combustion chamber when using wood and under the grate when using smokeless fuels.

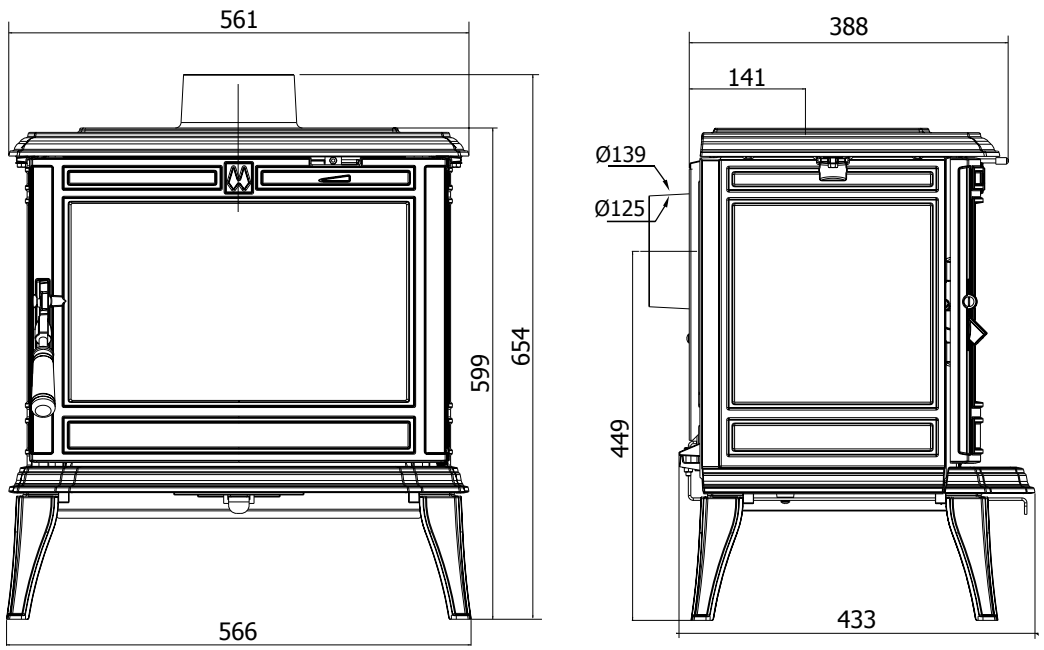

Figure 1
Dimensions in mm

2. Installation instructions

2.1 Warning to the user

All the local and national regulations, and in particular those relating to national and European standards, must be observed when installing the appliance.

An incorrectly installed heating appliance can cause serious accidents (chimney fires, burning of plastic insulation materials, in partition walls, etc.).

This stove is exempted by DEFRA for burning wood logs in UK Smoke Control Areas (SCA). DEFRA exemption is dependent upon the appliance being fitted with a mechanical stop to prevent closure of the secondary air control beyond the 25% open position. You should check that this stop mechanism is fitted before installation of the stove and certainly before using the stove in a SCA to burn wood logs. If the stop mechanism is fitted then the minimum chimney flue diameter can be 125 mm but if the stop mechanism is not fitted then the stove is not exempted and the minimum chimney flue diameter is 150 mm in accordance with Approved Document J of the building regulations.

The insulation of both the appliance and the exhaust gas pipe has to be reinforced and done according to the Standards and the Building Regulations for safety reasons. The installation must be carried out according to the Standards and the Building Regulations. Failure to respect the manufacturer's instructions will invalidate the warranty.

The manufacturer's responsibility shall be limited to the supply of the appliance.

2.2 Location of the unit

Ventilation : For satisfactory appliance operation with a **natural draught**, check that sufficient air for combustion is available in the room. In houses equipped with one VMC (controlled mechanical ventilation), this one aspire and renew the ambient air ; in this case, the residence is under slight low pressure and a **non-sealable** external air intake must be installed in addition to the chimney itself, at least 50cm² in section.

Position of the unit : For new installations, select a central position within the house, to provide a good heat distribution around the building. The heat distribution towards the other rooms will be made through the communicating doors. These rooms must be at low pressure or fitted with **non-adjustable air registers, placed so that they cannot be obstructed**, to encourage circulation of the hot air.

Floor and walls : make sure there are not combustible or covered with non combustible material. Otherwise it must be necessary to install a non combustible protection.

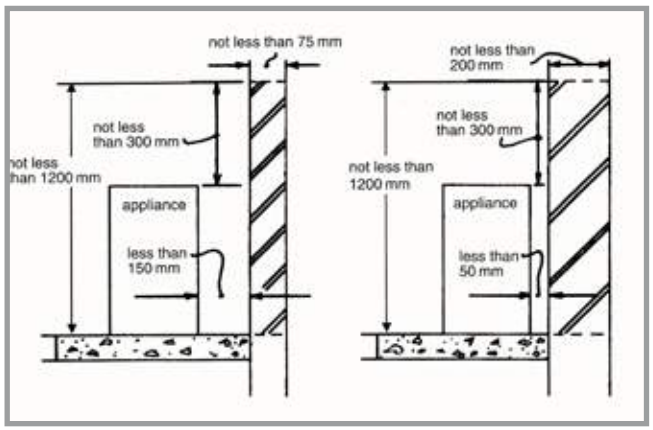

Figure 2 - Smoke exit on the top

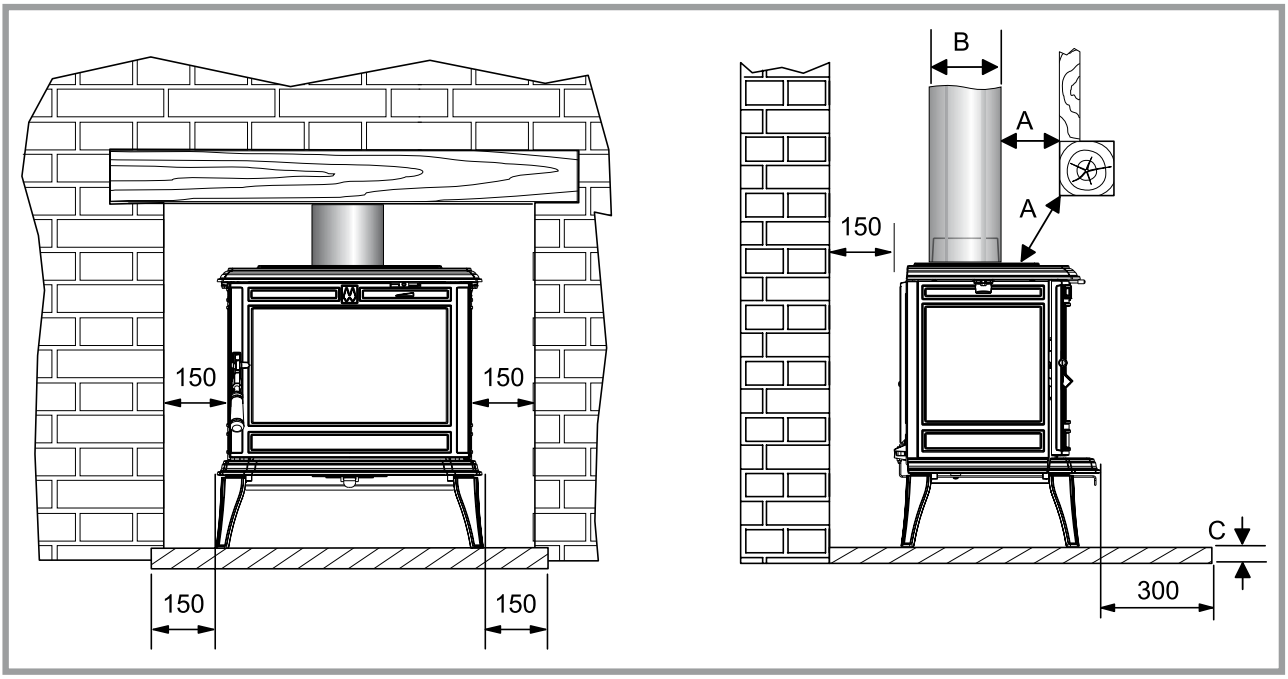

Figure 3 - Minimum clearances

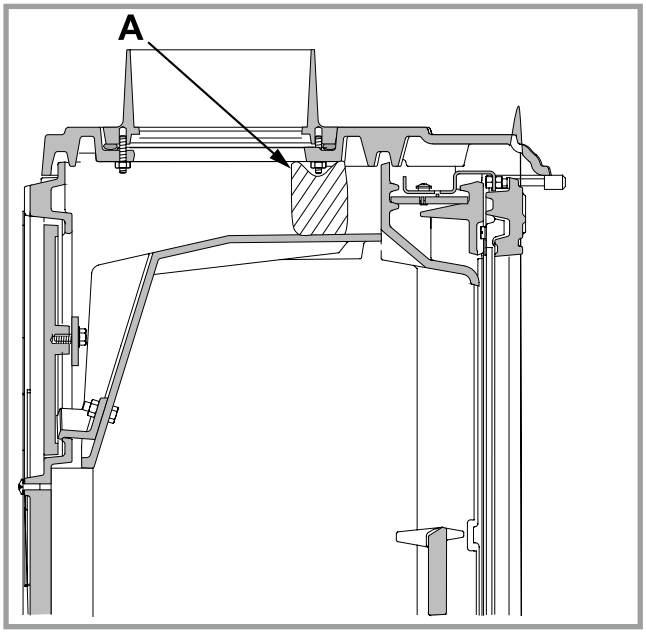

Figure 4 - Smoke exit on the top

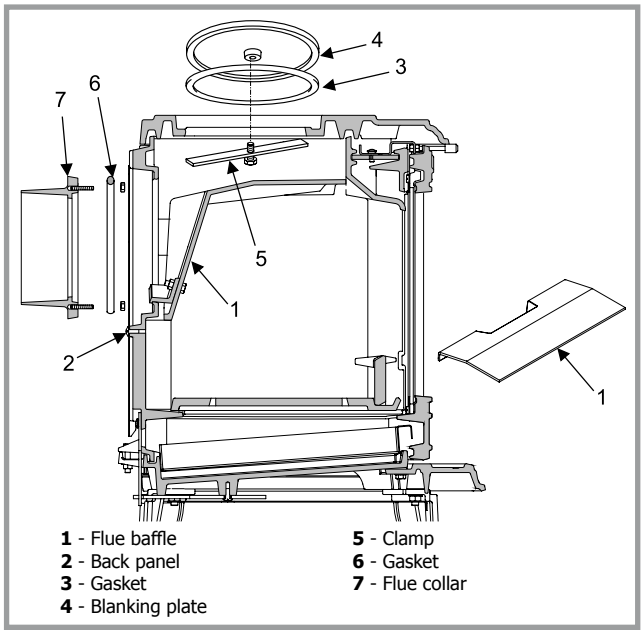

Figure 5 - Smoke exit at rear

There must be a clearance of at least 150 mm at each side (back and sides) of the appliance in accordance with the below recommandations from a non combustible wall. This distance must be extended to a minimum clearance of 900 mm side and 700 back from any combustible material.

If any part of the back or sides of the appliance lies within 150 mm horizontally of the wall, than the wall should be of solid non-combustible construction at least 50 mm thick from level to a level of 200 mm above the top of the appliance and 1200 mm above the hearth.

Il however, any part or sides of the appliance lies within 50 mm of the wall, then the wall should be of solid non-combustible construction at least 200 mm thick from floor level to a level of 300 mm above the top of the appliance and 1200 mm above the hearth. Where the hearth itself in at least 150 mm from an adjacent wall.

There is no requirement for protection of the wall. It should be noted that these thicknesses of solid non-combustible material can be substituted by thinner material if the same overall level of protection can be achieved.

When using a single wall flue pipe, there must be a clearance (A) of at least three times its diameter (B) from any combustible materials. If the appliance has to be located in an opening, this distance must be extended to a minimum clearance (A) of 450 mm from the pipe or the stove body to any combustible materials.

Hearth : The appliance must stand on a fireproof hearth. It is possible to provide a hearth made of non combusible board/sheet material or tiles at least 12 mm thick (C). Constructional hearths should be constructed of solid non combustible material at least 125 mm thick (including the thickness of any non combustible floor under the hearth).The hearth must protrude at least 300 mm in front of the stove and 150 mm each side. Hearths are provided to prevent combustion appliances setting fire to the building fabric and furnishings and to limit the risk of people being accidentally burnt.

Therefore, they should be separated from adjacent combustible materials and should be satisfactorily delineated from surrounding floor finishes (carpets etc.) as follows.

Combustible material should not be placed under a constructional hearth for a solid fuel appliance within a vertical distance of 250 mm from the upper surface of the hearth, unless there is an airspace of at least 50 mm between the combustible material and the underside of the hearth.

Where a superimposed hearth has been placed onto a constructional hearth, combustible material placed on or besid the constructional hearth should not extend under the superimposed hearth by more than 25 mm or closer to the appliance than 150 mm.

Ensure that the hear th (super imposed or constructional) is suitably delineated to discourage combustible floor finishes from being laid too close to the appliance, by marking the edges or providing a change of level.

Position the appliance on the hearth such that combustible marerial cannot be laid closer to the base of the appliance than :

(a) At the front, 300 mm if the appliance is an open fire or stove which an, when opened , be operated as an open fire, or 225 mm in any other case ;

(b) At the back and sides, 150 mm or in accordance with the recommendations below which relate to distance from hearth to walls. Please refer to section J of the Building regulations.

When using a single wall flue pipe, there must be a clearance (A) of at least 450 mm from any combustible materials (timber mantel, girder).

2.3 Mounting the flue collar

The stove is supplied with a connection flue spigot with an inner diameter of 125 mm and an outer diameter of 139 mm.

2.4 Smoke exit on the top

Figure 4

- The stove is set from the factory with a top outlet.
- **Do not remove the cast iron top.**
- Remove the cardboard chock from the top (A).

2.5. Smoke exit at rear

Figure 5

- **Do not remove the cast iron top.**
- Remove the cardboard chock from the top.
- Remove the infernal baffle **1**.
- Removed the flue spigot **7**.
- Place the seal rope **3** within the groove, fix the blanking plate **4** and the clamp **5** and ensure a good tightness.
- Place the seal rope **6** within the groove, screw into position the spigot **7** and ensure a good tightness
- Refit the flue baffle **1**.

2.6 Flue

Existing flue : The chimney must comply with Current Building Regulations. If in doubt, consult your Dealer or local Building Inspector.

• The flue must be in good condition and must provide sufficient draught (refer to technical details p. 3).

• The flue must be suitable for the installation of fuel burning appliances, otherwise it must necessary to install a tubing.

• The flue must be clean. It should be swept to remove soot and dislodge tar deposits.

• The flue must be well insulated. If the flue inner wall surfaces are cold, a good thermal draw is impossible causing condensation problems (tar formation etc) to occur.

• The flue must be watertight.

• The flue must not be shared with other appliances.

• The chimney must have a constant cross section.

• When the cross-section of the chimney is too large, it has difficulties in obtaining a good draught.

• The chimney must be at least 4.5 m (15 ft) high and be at 40 cm above the ridge of the roof and 8 meters away from any construction.

• In case of a flat roof or when the roof gradient is lower than 15°, the stack must be 1,2 m (4 feet) high at least.

• The capping must not restrain the draught.

• If the chimney has any down draught tendency, due to its position in relation to nearby obstacles, then an anti-down draught cowl must be installed on the chimney or the chimney height must be increased.

• If the chimney draught is excessive or irregular, a draught stabilizer (barometric damper) must be installed to the connector pipe it must be visible and accessible.

Chimney to be built / New flue : The chimney

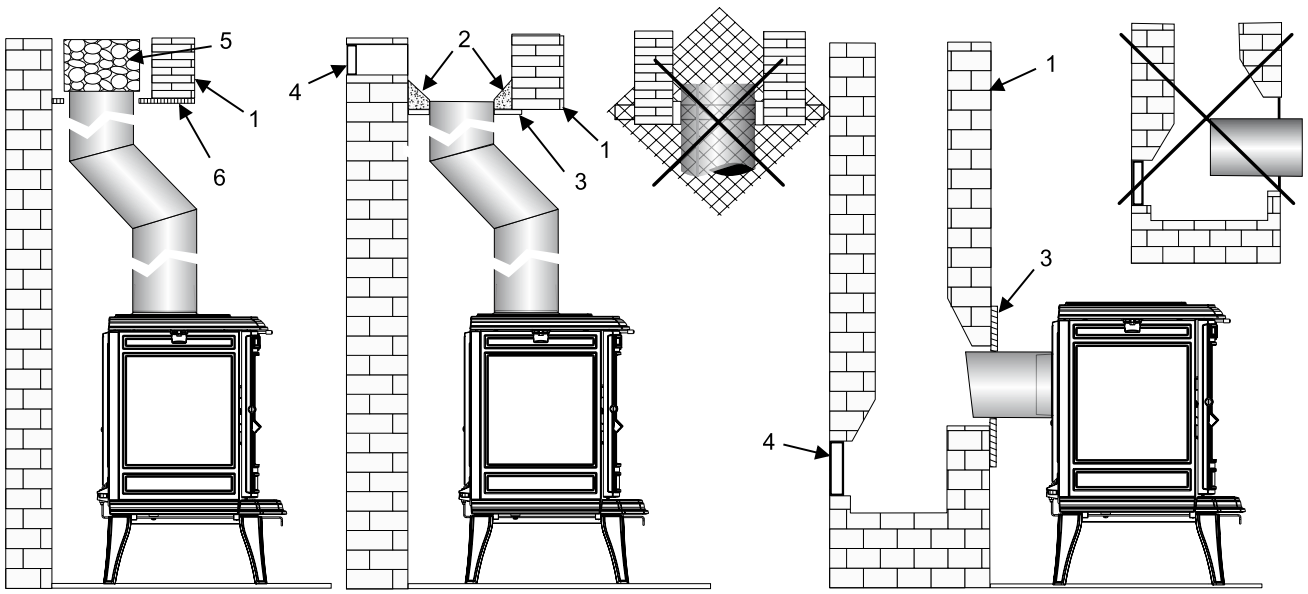

1 - Chimney
2 - Funnel-shape fireproof material.
3 - Non-combustible plate
4 - Access to cleaning
5 - Insulation
6 - Plate not removable and ventilated air

Figure 6 - Chimney connector

must comply with Current Building Regulations. If in doubt, consult your Dealer or local Building Inspector.

• The appliance must not support the weight of the flue.

• It must be distant from any combustible material (walls, cross members)

• It must permit easy sweeping.

2.7 Chimney connector

• The connection to the flue must be carried out according to local building regulations.

• The appliance must be installed as close as possible to the chimney.

• Any connection pipe must be suitable for use with solid fuel burning appliances in accordance with Approved Document J of the building regulations.

• The connecting pipe must not reduce in diameter at any point to less than the diameter of the outlet of the stove.

• The connection can be either vertical or horizontal. For horizontal connections, avoid right angle bends.

• The join between the connection pipe and the stovepipe, and the flue, must be leak tight.

• For the premises equipped with a mechanical controlled ventilation, the airtightness has to prevent the exhauster drawing out the smokes from the exhaust gas pipe.

• The connection pipe and any draught stabiliser must have access for cleaning.

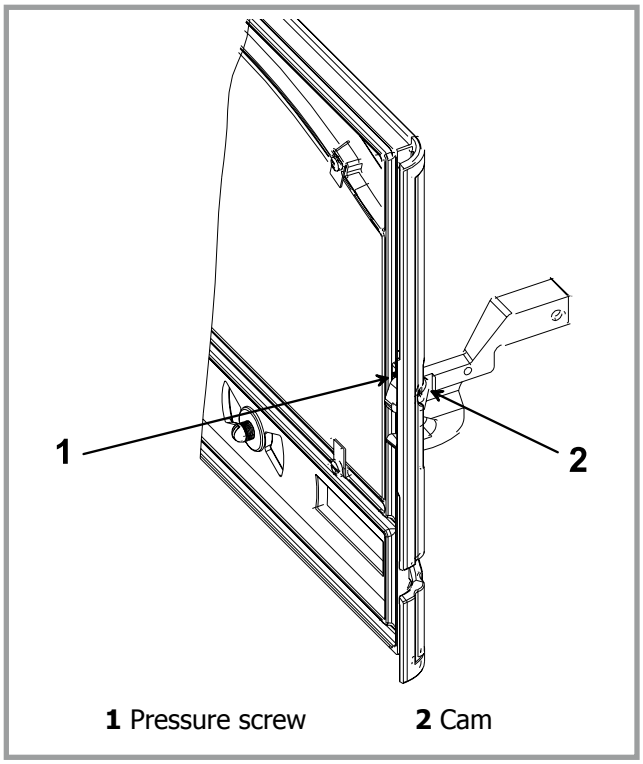

Figure 7 - Adjusting of the door closing pressure

2.8. Door closing pressure

Figure 7

The closing latch rotates around a pressure screw positioned cam.

- Loosen pressure screw **1**,
- Turn cam to desired position. **2**,
- Tighten pressure screw **1**.

2.9 Pre-utilisation check

Check that the seals of the smoke-line are in good condition. Check that the door closes correctly. Check that the glass is not damaged. Check that the smoke passages are not obstructed by packaging or removable parts. Check that all removable parts are correctly installed.

2.10 Maintenance of the Chimney

Very important : In order to avoid any incident (chimney fire, etc...), maintenance tasks must be carried out regularly. If the appliance is regularly used, the chimney should be swept several times per year, together with the stovepipe connection section.

If the chimney catches fire, you must cut off the flue draught, close the doors and windows, hatches and keys and call the Fire Brigade without delay.

DO NOT OPEN THE DOOR OF THE APPLIANCE (OR AIR INLET) UNDER ANY CIRCUMSTANCES

Chimney condition should be checked at least once per year by a professional engineer.

3. Instructions for user

The manufacturer will not be responsible for any damage caused to the appliance due to the incorrect use or installation of the appliance e.g. prohibited fuel use and any alterations made to the appliance which have not been authorised by. the manufacturer. **We recommend that you use only the manufacturer's own brand spare parts.**

Don’t run the stove inmild weather with coal : Under certain circumstances (e.g. fog and repeated thaw) the chimney will not draw sufficiently well and thus be at the origin of asphyxia.
Awaiting better weather circumstances, don’t use any coal but only wood.

At the first lighting, the fire must be progressively increased to allow the various parts to expand normally and to dry up.

Note : When the fire is lit for the first time, the stove may give off fumes from the new paint. This is normal but ensure the room is well ventilated during the first few hours of operation.

Warning : properly installed and operated this appliance will not emit fumes into the dwelling.

Occasional fumes from de-ashing and re-fuelling may occur. Persistent fume emission is dangerous and must not be tolerated. If fume emission does persist : Open doors and windows to ventilate room.

Let the fire go out and dispose of fuel from the appliance.

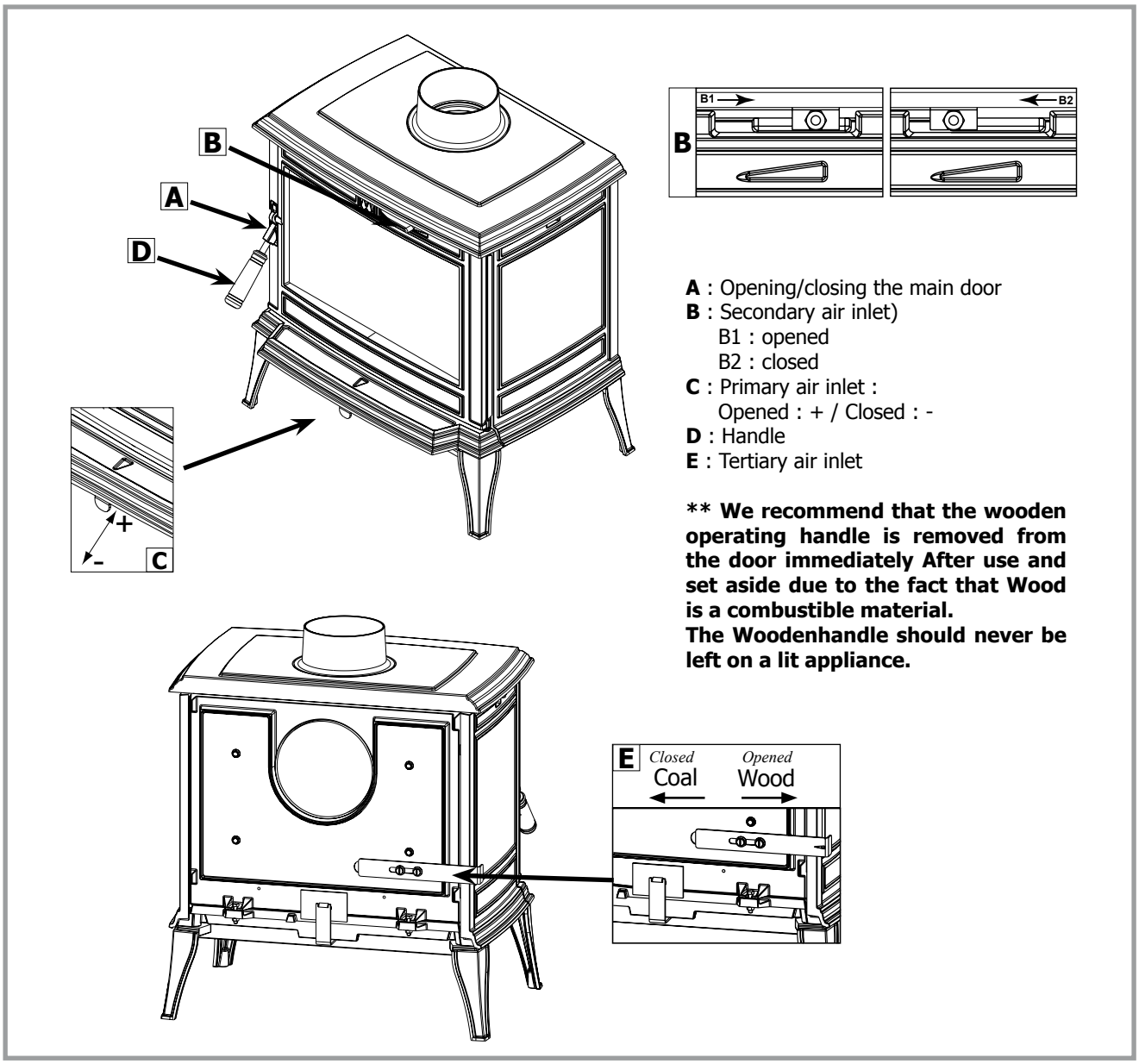

A : Opening/closing the main door
B : Secondary air inlet)
B1 : opened
B2 : closed
C : Primary air inlet :
Opened : + / Closed : -
D : Handle
E : Tertiary air inlet

**** We recommend that the wooden operating handle is removed from the door immediately After use and set aside due to the fact that Wood is a combustible material.**
The Woodenhandle should never be left on a lit appliance.

*Figure 8 * Operating devices*

Check for flue or chimney blockage, and clean if required. Do not attempt to relight the fire until the cause of the fume emission has been identified and corrected. If necessary seek expert advice.

Note : It is recommended to use a fireguard in the presence of children, and also in the presence of old and/or infirm people.

3.1 Fuel

This appliance is not an incinerator.

Use hard wood logs, which have been cut for at least two years and stored, under a ventilated shelter.

Use hardwood that have a higher calorific value per cu metre (Yoke-elm, oak, ash, maple, birch, elm, beech, etc.). Large logs must be split and cut to an useful length, before being stored in a sheltered and ventilated place.

• Recommended fuel :

The best fuels for use with the Franco Belge "Monaco" are :

Seasoned wood. - hard wood logs that have been cut, split and stored for at least two years with a maximum moisture content of 20 % e.g. oak, beech, elm etc.

Anthracite – dry steam coal fuels as described in type A – table B2 of the Standard – smokeless fuels such as homefire, phurnacite, ancit.

We do not recommend the use of Homefire on your stove due to the number of glass panels which have been effected by this fuel.

• Prohibited fuel :

Any form of housecoal (bituminous coal) or petroleum based fuels.

We do not allow that unseasoned wood (green wood) is used due to it's high levels of moisture which will produce tar and in turn can cause the insides of the stove and the lining of the chimney to become coated which in turn could lead to a chimney fire.

We do not allow recovered wood e.g railway sleepers,chipboard, pallets are burned as these have been treated and will product a great deal of pollution to the environment and will overheat the appliance.

3.2. Instruction for use with Wood

Figure 8

3.2.1. Lighting

Set all air controls to the maximum opening. Use a double handful of kindling and light the fire with chemical firelighters with the door 5-10 mm ajar.

After several minutes the flames from the firebed are diminishing, add 2 half-sized logs and keep the door ajar and the air controls unaltered.

About 12 minutes from the Start, when the logs are well alight but flames Start receding, add 2 full sized logs and leave the controls as before.

After a further 3 mn, close the door wait for another 3 mn and close the primary air (C) until the logs burn down to embers, reload a this point and adjust the settings to the desired positions.

Never use firelighters under liquid forms as they may lead do severe safety issues.

3.2.2. Refuelling procedure

- The appliance must function with the door property closed, the burning rate beign controlled in using the secondary air flap (B).

Experience will show you which settings are best for your situation.

Before refuelling, set the secondary air (B) to the required setting, open at maximum the primary air (C), load the Wood and wait for 3 or 4 minutes.

After This period, when the fuel logs are well blackened and the flances well established close the primary air.

The airwash system works with the top airslide (secondary air inlet B). When the top airslide is fully opened the system works at is strangest efficiency.

The more closed down the air slide is the less effective the airwash will be (when shut down completely, the airwash system can not function).

The nominal output is obtained with the settings as follows :

- primary air inlet (C) - Closed
- secondary air inlet (B) - 50 % Open
- Tertiary air inlet - Opened

- It is important to follow theses instructions in order to active clean burning and to maximise the efficiency from the stove.

- Do not leave the fire unattended After on the new charged logs.

- Always refuel on to hot embers.

- Never overload the firebox. Always keep the logs below the level of the tertiary air holes.

3.3. Operating procedure when using solid mineral fuels (smokeless fuels)

- When using smokeless fuels the tertiary air should be closed (coal position) as the secondary air inlet (B).

The nominal output is obtained with the air settings as follows :

- primary air (C) : 75 % opened
- secondary air (B) : closed
- tertiary air (E) : closed

3.5. De-ashing

- Ashes must be removed regularly.
- Ashes must never be allowed to pile up to the grate. The grate would not be cool down and could rapidly be damaged.
- Empty the ashes when the appliance is cold.
- Remove the ash drawer using the tool provided.
- Empty the ashes carefully with regard to the live embers.

3.3 Maintenance of the Chimney

Very important ! In order to avoid any incident (chimney fire, etc...), maintenance tasks must be carried out regularly.

If the appliance is regularly used, the chimney should be swept several times per year, together with the stovepipe connection section.

If the chimney catches fire, you must cut off the flue draught, close the doors and windows, hatches and keys and call the Fire Brigade without delay.

DO NOT OPEN THE DOOR OF THE APPLIANCE (OR AIR INLET) UNDER ANY CIRCUMSTANCES.

The chimney must be serviced and cleaned by a specialist.

3.6 Maintenance of the stove

• The appliance must be cleaned regularly , together with the connecting pipe and the flue pipe.

• Open the door and remove all deposits in the firebox and clean the removable fire grate.

• Cleaning of the glass door can be done with a soft cloth dampened with water and vinegar or potassium ; this must be done when the appliance is cold ; then rinse with clear water. Do not use abrasive cleaners.

• The "vitroceramic" glass will resists to temperatures of up to 750 C. Should the glass break due to misuse, it must be replaced by the manufacturer own product.

• All the casing parts can be cleaned using a soft cloth either dry, or slightly damp. In case of condensation or water splashes clean the parts before they dry out.

• Check that there are no obstructions before relighting after a long period of disuse.

• The appliance must not be used with a flue serving several appliances.

• Keep the grates ventilation free of any obstructions.

3.7 Safety advice

This appliance produces heat and may cause severe burns if touched.

The stove may still be **HOT** even when the fire has burnt out.

KEEP CHILDREN AWAY.
A FIRE GUARD IS ADVISABLE TO PROTECT CHILDREN, THE ELDERLY AND INFIRM.

3.8. Trouble Shooting

■ : This sign means that you should ask for a qualified engineer to do the work.

Problem	**Probable causes**	■	- ACTION
Fire difficult to start *Fire goes out*	**Wood green...or damp**		Use hard wood logs, which have been cut for at least two years and stored, under a ventilated shelter.
	Logs are too big.		- To light the fire, use small, very dry twigs. To maintain the fire, use split logs.
	Poor quality wood		- Use hardwood that have a higher calorific value per cu metre (Yoke-elm, oak, ash, maple, birch, elm, beech, etc.)
	Not enough primary air		- Open air control.
	Insufficient draught	■	- Check that the flue is not obstructed, sweep it if necessary - Seek advice from a chimney specialist.
Fire burns too quickly.	**Too much draught**		- Partially close the top air control.
	Excessive draught.	■	- Install a draught stabiliser to the connector pipe. Consult your Dealer.
	Poor quality wood.		- Do not continuously burn small wood, sticks, bundles, carpentry offcuts (plywood, pallets), etc.
Smokes when lighting up.	**Flue duct is cold.**		- Burn paper and kindling wood to increase heat.
	Room is in decompression (negative pressure)		- In houses equipped with mechanical ventilation, partly open a window until the fire is well established.
Smokes while burning.	**Draught is insufficient.**	■	- Consult a chimney specialist. - Check that the flue is not obstructed, sweep if necessary.
	Down draught.	■	- Install an anti-down draught cowl. Consult your Dealer.
	Room is in decompression.	■	- In houses equipped with Mechanical Ventilation, partly open a window until the fire is well established.
Low heat output.	**Poor quality wood.**		- Use hardwood that have a higher calorific value per cu metre (Yoke-elm, oak, ash, maple, birch, elm, beech, etc.)
	Poor mixing of the convection air		- Check the air flow system (air inlet, piping, air outlet). - Check that the next rooms are equiped with ventilation grids to help out the hot air circulation.

4. Spare parts

When ordering spare parts, specify the stove **type** and **serial number**, including the **colour** index (on the guarantee or identification plate), the **name of the part** and the **part number**.
Example : Wood stove **"Monaco"**, ref. 134 06 05 color **P**, top plate **352175 RH**

Y = 1340605 Y ; **P** = 1340605 P ; **L** = 1340605 L ; **E** = 1340605 E ; **J** = 1340605 J

N°	Code	Description	Type	Y	P	L	E	J	Qty
1	100917	Axle	12x20 M7	Y	P	L	E	J	1
2	100939	Axle		Y	P	L	E	J	3
3	100964	Axle		Y	P	L	E	J	2
4	101067	Axle		Y	P	L	E	J	1
5	102042	Firebrick		Y	P	L	E	J	2
6	102044	Firebrick		Y	P	L	E	J	2
7	105006	Gasket		Y	P	L	E	J	1,65 m
8	134758	Pin	4x16	Y	P	L	E	J	1
9	142881	Gasket		Y	P	L	E	J	2
10	158637	Handle		Y	P	L	E	J	1
11	179628	Regulator shaft		Y	P	L	E	J	2
12	181614	Gasket		Y	P	L	E	J	1,04 m
13	181632	Gasket		Y	P	L	E	J	1,35 m
14	181633	Gasket		Y	P	L	E	J	1,58 m
15	188858	Ceramic glass		Y	P	L	E	J	1
16	189104	Screw		Y	P	L	E	J	2
17	204209 00	Supplementary plate		Y	P	L	E	J	1
18	224022 00	Ash-pan		Y	P	L	E	J	1
19	228624 00	Square		Y	P	L	E	J	1
20	231304 00	Square		Y	P	L	E	J	1
21	237430 00	Reducing plate		Y	P	L	E	J	1
22	259015 00	Fixing plate		Y	P	L	E	J	2
23	262614 00	Heat shield		Y	P	L	E	J	1
24	265606 00	Knob		Y	P	L	E	J	1
25	265608 00	Knob		Y	P	L	E	J	1
26	270402 00	Air control flap		Y	P	L	E	J	1
27	270417 00	Air control flap		Y	P	L	E	J	1
28	300136 RH	Leg			P				4
28	300136 RP	Leg					E		4
28	300136 77	Leg				L			4
28	300136 79	Leg						J	4
28	300136 EF	Leg		Y					4
29	300432 EF	Base		Y	P	L	E	J	1
30	301537 71	Door lock		Y	P	L	E	J	1
31	303718 RH	Blanking plate			P				1
31	303718 RP	Blanking plate					E		1
31	303718 77	Blanking plate				L			1
31	303718 79	Blanking plate						J	1
31	303718 EF	Blanking plate		Y					1
32	303860 RH	Flue collar			P				1
32	303860 RP	Flue collar					E		1
32	303860 77	Flue collar				L			1
32	303860 79	Flue collar						J	1
32	303860 EF	Flue collar		Y					1
33	306296 EF	Back wall		Y	P	L	E	J	1
34	307424 EF	Full retainer		Y	P	L	E	J	1
35	309232	Wood grate		Y	P	L	E	J	1
36	310733 RH	Side panel			P				1
36	310733 RP	Side panel					E		1
36	310733 77	Side panel				L			1
36	310733 79	Side panel						J	1
36	310733 EF	Side panel		Y					1
37	310833 RH	Side panel			P				1
37	310833 RP	Side panel					E		1
37	310833 77	Side panel				L			1
37	310833 79	Side panel						J	1
37	310833 EF	Side panel		Y					1
38	315615	Air duct		Y	P	L	E	J	1
39	323209	Flue baffle		Y	P	L	E	J	1
40	324503	Sealing plate		Y	P	L	E	J	1
41	326605	Suppl. flue baffle		Y	P	L	E	J	1
42	327909 RH	Ash pan guide			P				1
42	327909 RP	Ash pan guide					E		1
42	327909 77	Ash pan guide				L			1

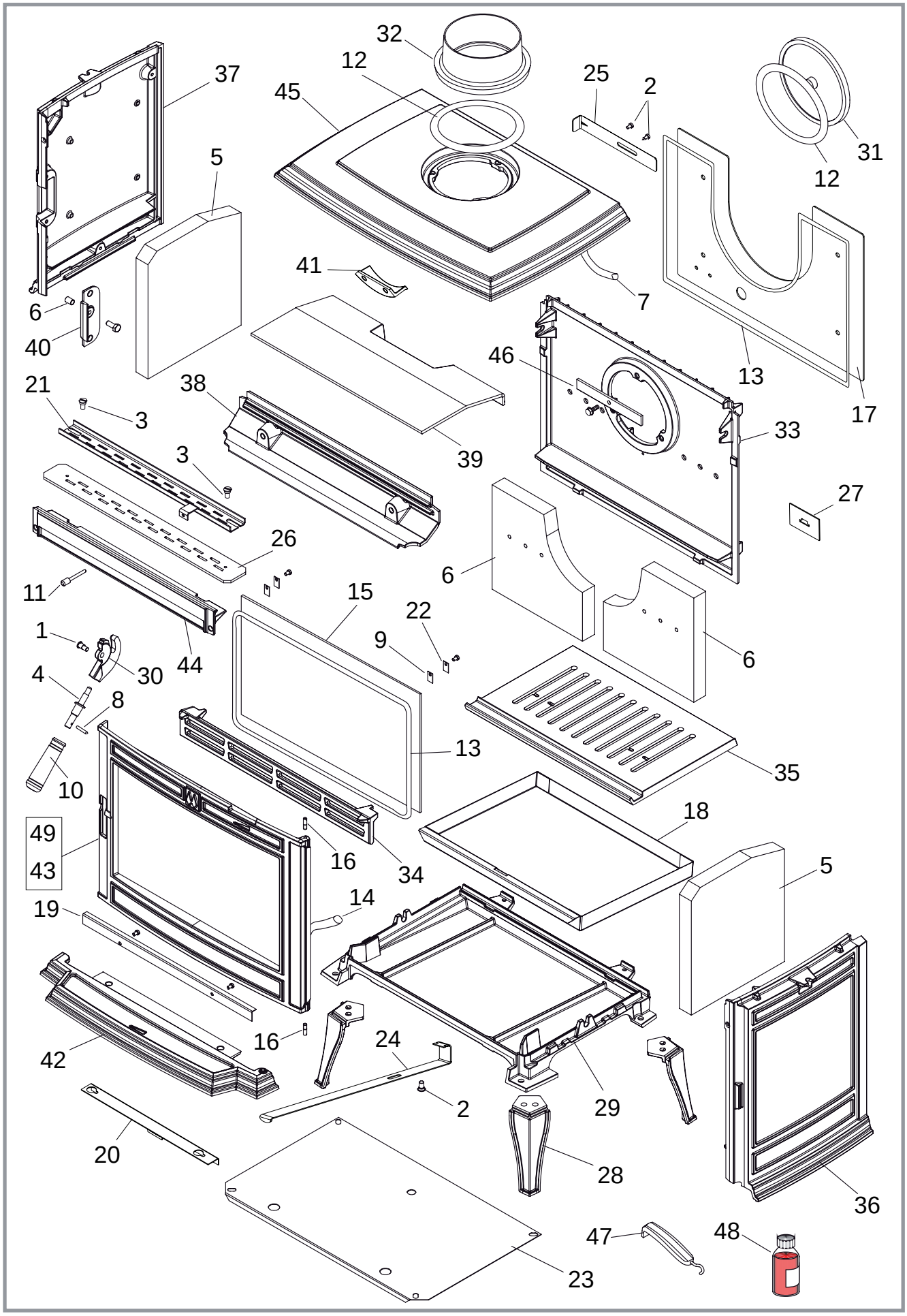

Figure 9 - Stove - exploded view

Y = 1340605 Y ; **P** = 1340605 P ; **L** = 1340605 L ; **E** = 1340605 E ; **J** = 1340605 J

N°	Code	Description	Type	Y	P	L	E	J	Qty
42	327909 79	Ash pan guide						J	1
42	327909 EF	Ash pan guide		Y					1
43	331116 RH	Main door			P				1
43	331116 RP	Main door					E		1
43	331116 77	Main door				L			1
43	331116 79	Main door						J	1
43	331116 EF	Main door		Y					1
44	332004	Air duct		Y	P	L	E	J	1
45	352175 RH	Top plate			P				1
45	352175 RP	Top plate					E		1
45	352175 77	Top plate				L			1
45	352175 79	Top plate						J	1
45	352175 EF	Top plate		Y					1
46	406816	Clamp		Y	P	L	E	J	1
47	808001 ED	Hand tool		Y	P	L	E	J	1
48	161025	Touch-up paint				L			1
48	161027	Touch-up paint						J	1
48	161060	Touch-up paint			P				1
48	161061	Touch-up paint					E		1
49	989009	Complete door		Y	P	L	E	J	1

Notes

FRANCO BELGE

Guarantee certificate

Legal guarantee

The specifications, dimensions and information shown on our documents are provided for information purposes only and under no circumstances are binding upon the vendor.

With the aim of constantly improving our equipment, all modifications considered as necessary by our departments may be made without notice.

The provisions of the present guarantee certificate are not excluding or limiting the owner of the equipment's rights, concerning the legal guarantee regarding faults or hidden vices which applies in all circumstances, in the conditions detailed in articles 1641 and following of the civil code, and in the country in which the equipment was purchased.

Contractual guarantee

Our equipment is guaranteed against faults and hidden vices subject to the following conditions :

1) Installation and adjustment of the device by a professional installer.

2) Observance of the instructions provided in our technical documents and our installation/adjustment instructions.

3) The installation, use and maintenance of the device carried out in conformity with the applicable standards and legislation, and with the indications provided in the technical instructions accompanying the device.

This guarantee covers the replacement, in our factory, of parts recognised as being defective from the outset by our "Guarantee Inspection" Department. Carriage and labour is at the user's cost. Moreover, if the repair or replacement of parts covered by the guarantee is found to be too costly vis-à-vis the price of the appliance, the decision to replace or repair the appliance will be taken by the vendor.

Our guarantee is for 2 (two) years for all appliances, with the exception of closed combustion fireplace and inserts for which our guarantee is 5 (five) years excluding the following :

1) Indicator lights, fuses, electrical elements and fans.

2) Parts subject to wear or in contact with high temperatures namely: soles and burner grates, bottom plates baffles, ash *pans, paintwork and surface treatments for decorative parts. Also excluded from this guarantee are seals and glass.*

3) Any damage which may result from the use of the appliance with a fuel other than that stipulated in our instructions.

4) Damage occurring to parts caused by elements outside the appliance (down draught, storm damage, damp, abnormal pressure or vacuum, heat shocks, etc.).

5) Damage to electrical parts caused by plugging in and using the appliance on a mains system, the voltage of which (measured at the entrance to the appliance) is 10% above or below the nominal voltage of 220 V.

Exclusion of liability

In the case of a product manufactured at the client's request, under no ci rcumstances may we, as a subcontractor, be considered liable vis-a-vis the client or third parties for defects arising from the installation or a design fault with the item in question.

Name and address of the installer : .....

.....

Telephone : .....

Name and address of the customer :.....

.....

Date of installation :.....

Model of the appliance : ☐ **134 06 05**

Color : ☐ **Y** ☐ **P** ☐ **L** ☐ **E** ☐ **J**

Serial number :.....

• This certificate has to be completed and kept carefully.
In case of claims, send a copy of this to :

FRANCO BELGE - BOUTIQUES DU FEU
Parc d'activités de la Verte Rue - Allée des Prêles - 59270 BAILLEUL - FRANCE